NEXT ASSEMBLY

REVISION HISTORY					
REV	DESCRIPTION	ECN	DATE	BY	APPROVED
A	ADDED NOTE ABOUT RAISED BUMPERS	08-009	3/28/08	GDB	
B	ADDED "FOR REFERENCE ONLY" NOTE	11-010	3/29/2011	GDB	
C	UPDATED LOGO AND TITLE BLOCK	14-006	3/31/2014	GDB	

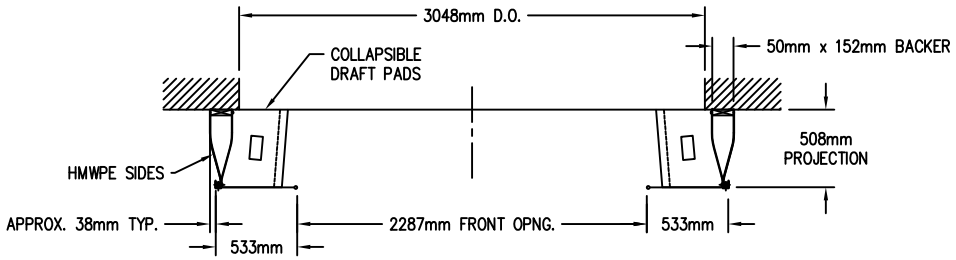

SECTION THRU PLAN

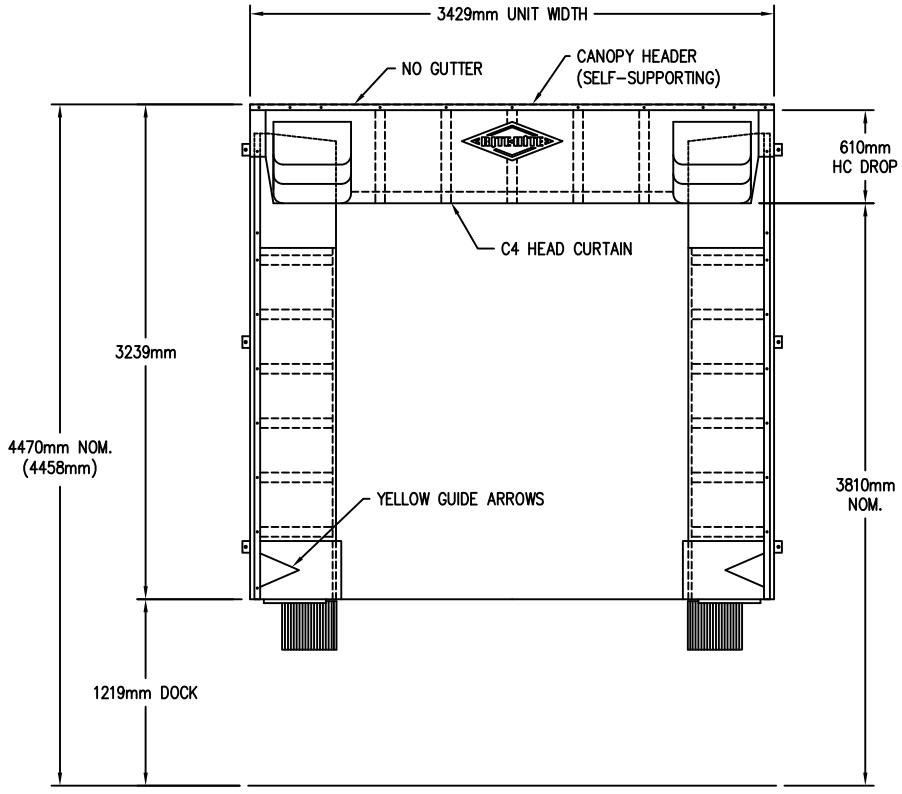

FRONT ELEVATION

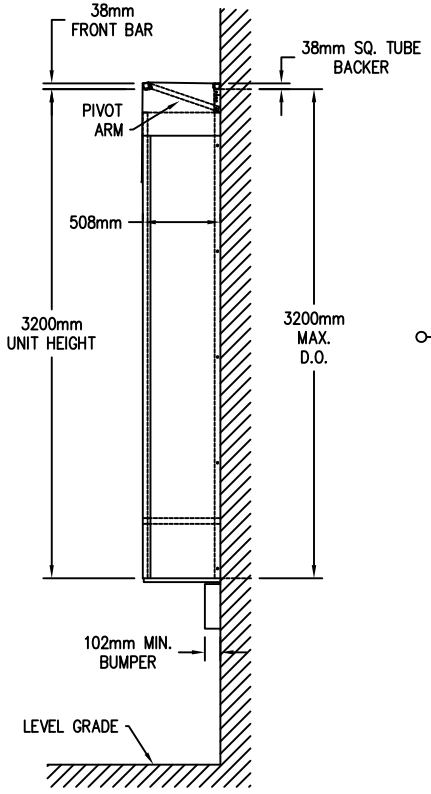

SIDE ELEVATION

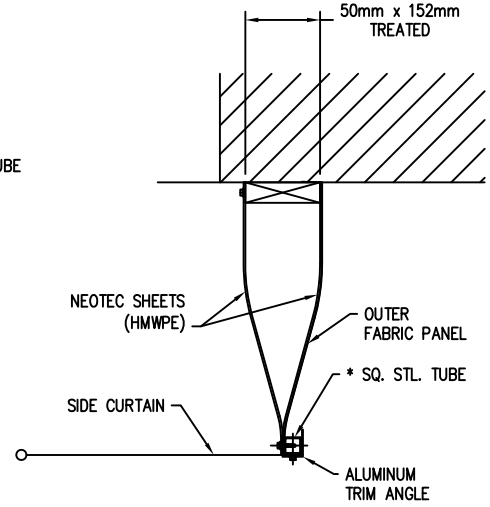

SECTION THRU SIDE MEMBER

*NOTE:
VERTICAL SQUARE TUBE ON SIDE MEMBER IS NOT TIED INTO FRONT BAR ON CANOPY HEADER UNITS

NOTES:
1) VARIOUS FABRIC OPTIONS AVAILABLE ON C4 STYLE HEAD CURTAIN & SIDE CURTAINS
2) RECOMMENDED TRUCK COVERAGE: 3886mm TO 4115mm HIGH X 2438mm TO 2591mm WIDE
3) 508mm MINIMUM PROJECTION
4) 3429mm IS ONLY AVAILABLE WIDTH
5) AVAILABLE UP TO 813mm MAX. PROJECTION WITH CANOPY HEADER
6) AVAILABLE TAPERS ARE 76mm & 152mm ONLY
7) AVAILABLE DOCK HEIGHTS ARE 607mm MIN. TO 1524mm MAX.
8) APPLICATIONS THAT HAVE BUMPERS MOUNTED ABOVE DOCK HEIGHT (OR ABOVE THE PIT FLOOR IN VERTICAL LEVELER APPLICATIONS) MAY REQUIRE THAT THE BOTTOM OF THE SIDE MEMBERS BE MOUNTED AT THE TOP OF THE BUMPERS INSTEAD OF AT DOCK HEIGHT.

THIS DRAWING IS FOR REFERENCE ONLY. DO NOT USE FOR PRODUCTION PURPOSES.

©2005 RITE-HITE ENVIRONMENTAL ENCLOSURES CORP.

ITEM	QTY	PART NO.	DESCRIPTION
PARTS LIST / MATERIAL			

INCH TOLERANCES		
OVER	UP TO	+/-
0	0.125	0.005
0.125	0.25	0.010
0.25	1.25	0.020
1.25	5	0.030
5	15	0.040
15	40	0.060
40	80	0.100
80	-	0.125
ANGLES	+/- 1 DEG	
FINISH	NONE	

DO NOT SCALE DRAWING

MM-DD-YY

DRAWN BY GDB DATE 8/24/2007

CHECKED BY DATE

APPROVED BY DATE

INITIAL ECN

DATE ISSUED

REF

RITE-HITE ENVIRONMENTAL ENCLOSURES CORP.

TITLE
450S SURVIVOR (METRIC)
508mm PROJECTION UNIT
WITH OPTIONAL FLAT CANOPY HEADER

SIZE	MODEL NUMBER	DWG NO	REV
C	450S	A7120097	C

SCALE 1/2"=1' PART # SHEET 1 of 1

REV C
SHEET 1 of 1
DWG NO A7120097